IDD UH60M Avionics Architecture

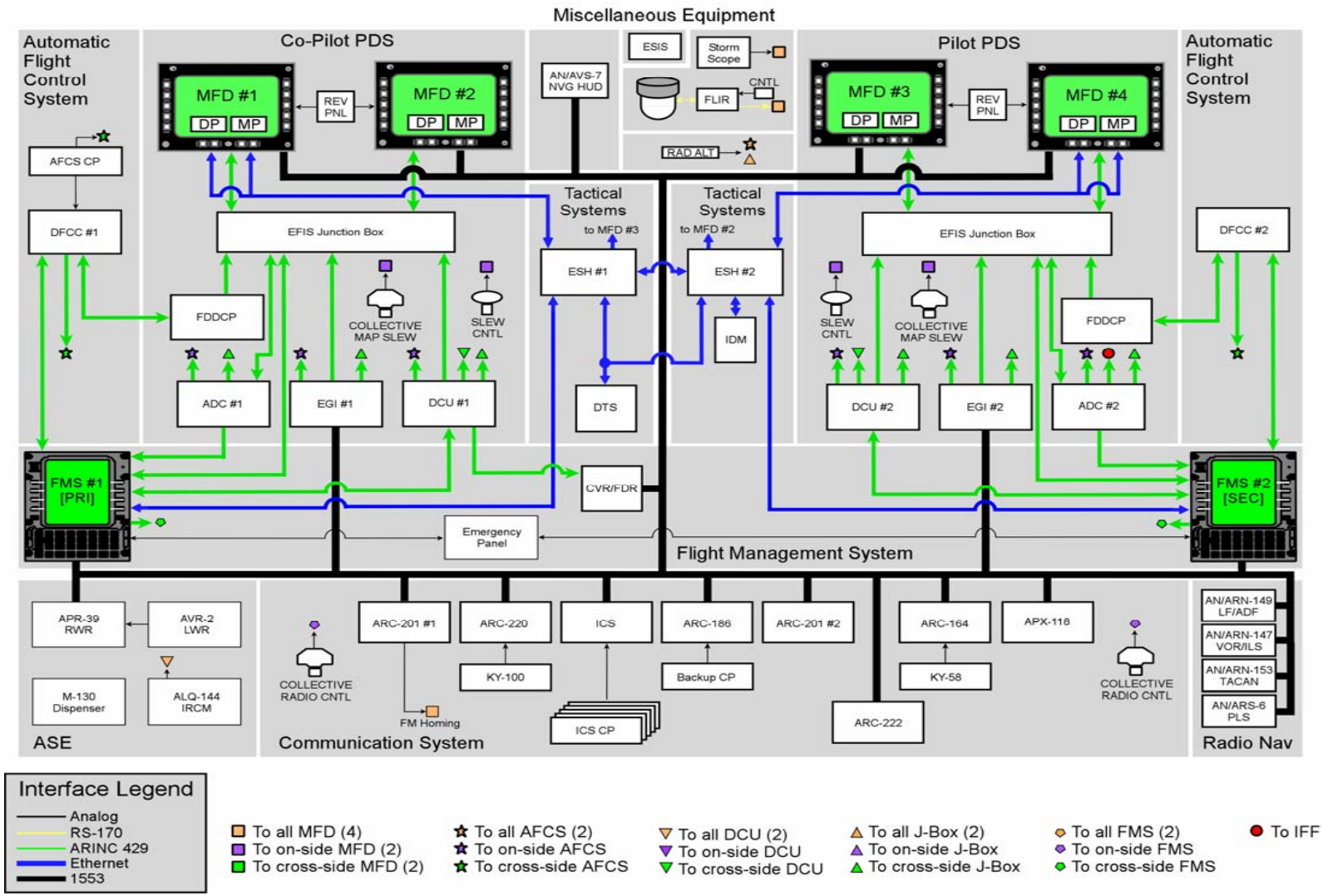

This information may change and should just be a reference.

UH-60M Upgrade System Architecture

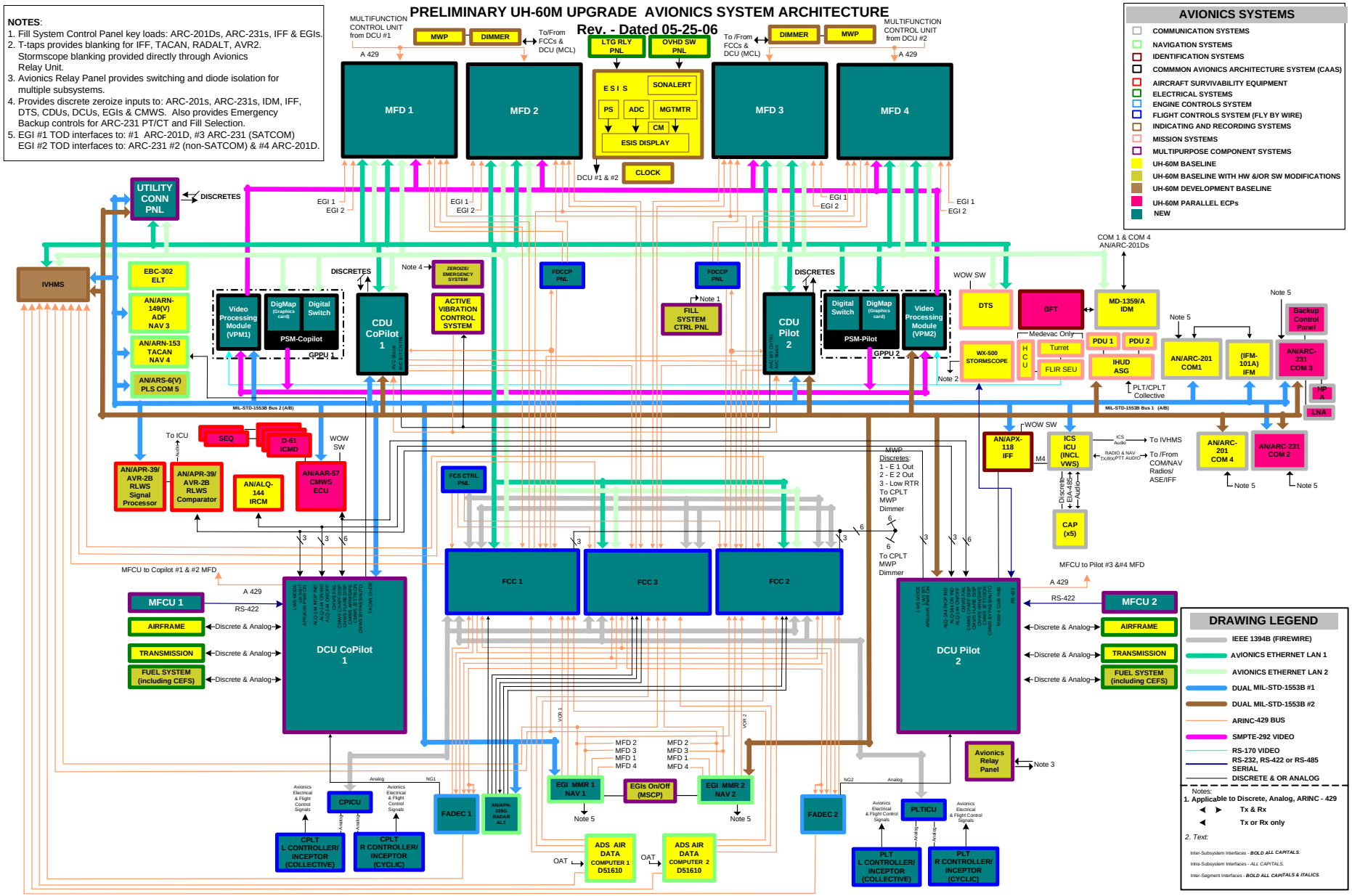

This information may change and should just be a reference.